SUSPENSION, TRAILING ARMS - Z26SPD92AN/AH/BN/BH (C750067)

2026 RZR - RZR PRO S ULTIMATE (R01) - Z26SPD92AN/AH/BN/BH

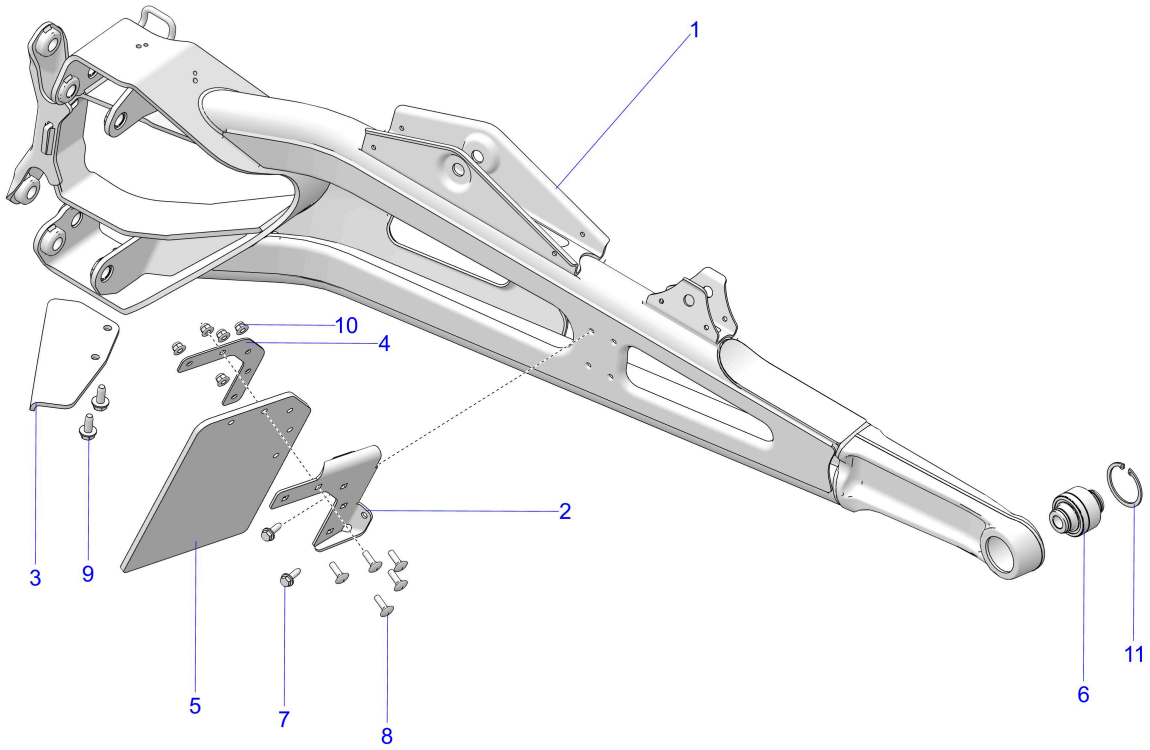

© 2023 Polaris Industries Inc. C750067

Reference #	*Part#*	*Description*	*Quantity*
1	1544540-458	ASM-TRAILING ARM,74,LH,BLK [INCLUDES ALL]	1
1	1544541-458	ASM-TRAILING ARM,74,RH,BLK [INCLUDES ALL]	1
2	5272682-458	BRKT-DEBRIS FLAP,LH,BLK	1
2	5272683-458	BRKT-DEBRIS FLAP,RH,BLK	1
3	5270331	BRKT-WHEEL SCRAPER LH	1
3	5270332	BRKT-WHEEL SCRAPER RH	1
4	5270915-458	BRKT-MOUNT, DEBRIS FLAP,BLK	1
5	5417579	FLAP,DEBRIS	1
6	7082583	BEARING-SPHERICAL, M14,47X55	1
7	7518529	SCR-M6X1.0X20,HXHD,FLG,TDFM,BK	2
8	7518994	SCR-RHCARM6X1.0X20 8.8 ZOD	5
9	7519780	SCR-HFH-M8X1.25X20 TAP/R ZPB	2
10	7547453	NUT-HXFL-M6X1.0 8 ZB3 NYL	5
11	7710947	RING-SNAP,DIN472,47X1.75MM	1

Copyright 1996-2026 Polaris Industries U.S.A All rights reserved.